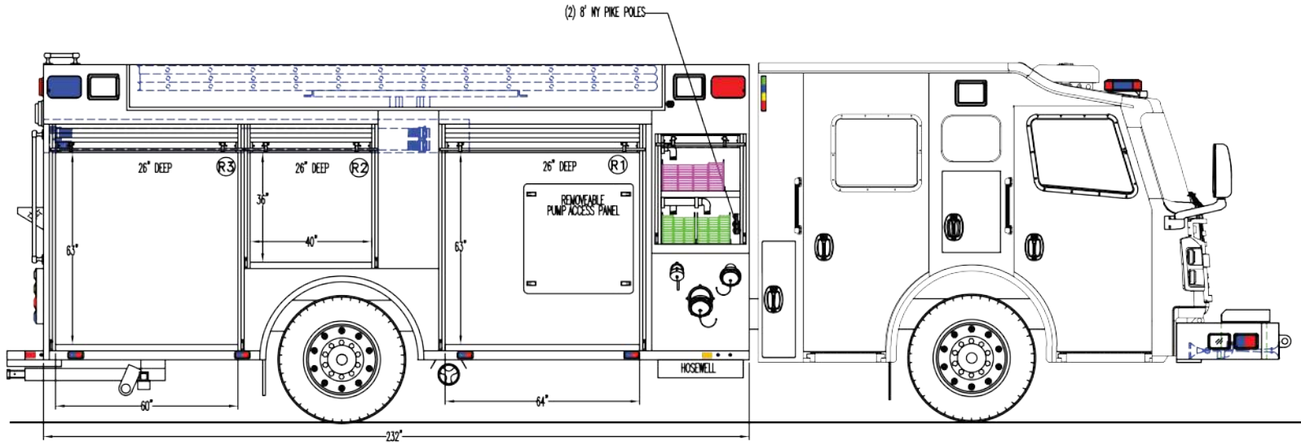

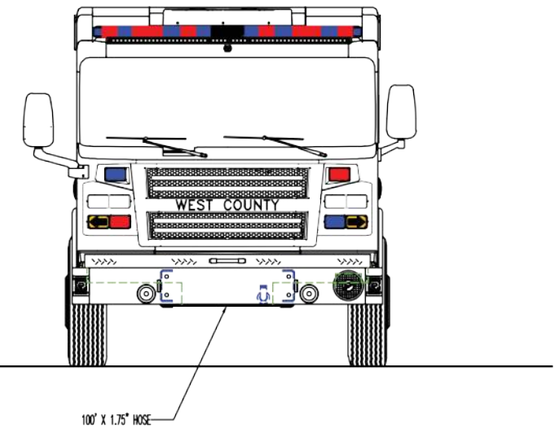

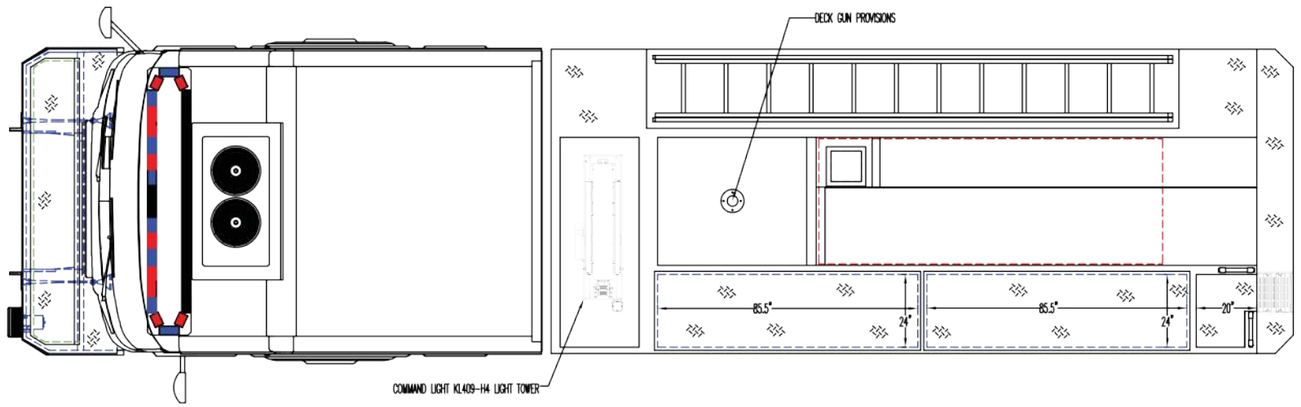

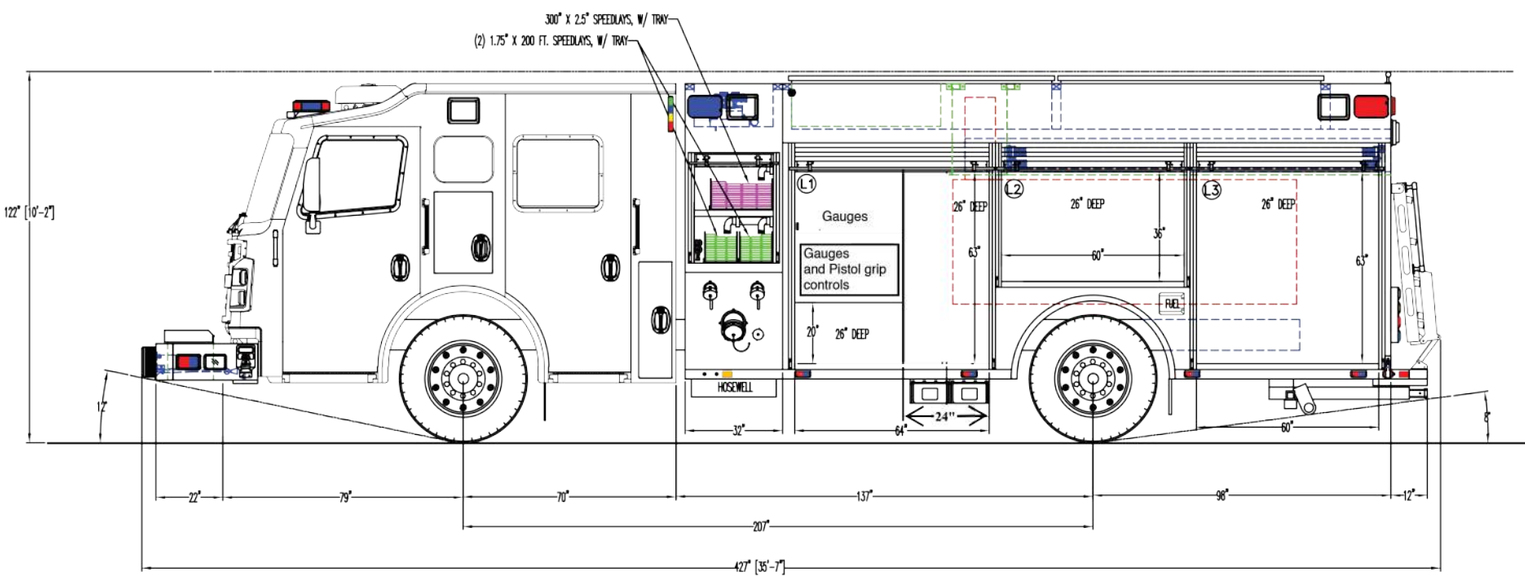

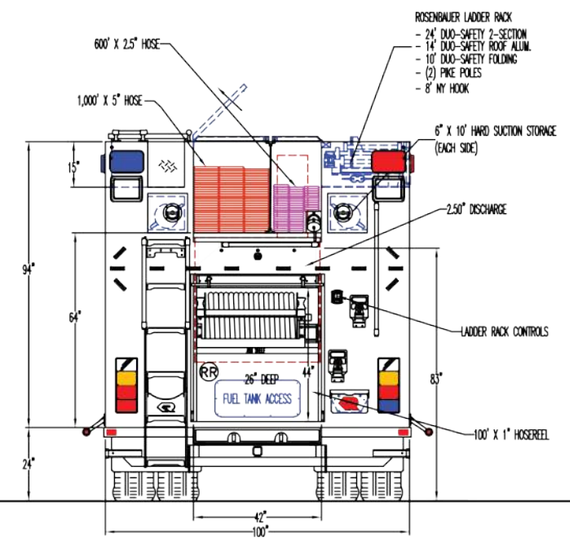

rosenbauer

SENTINEL EMERGENCY SOLUTIONS