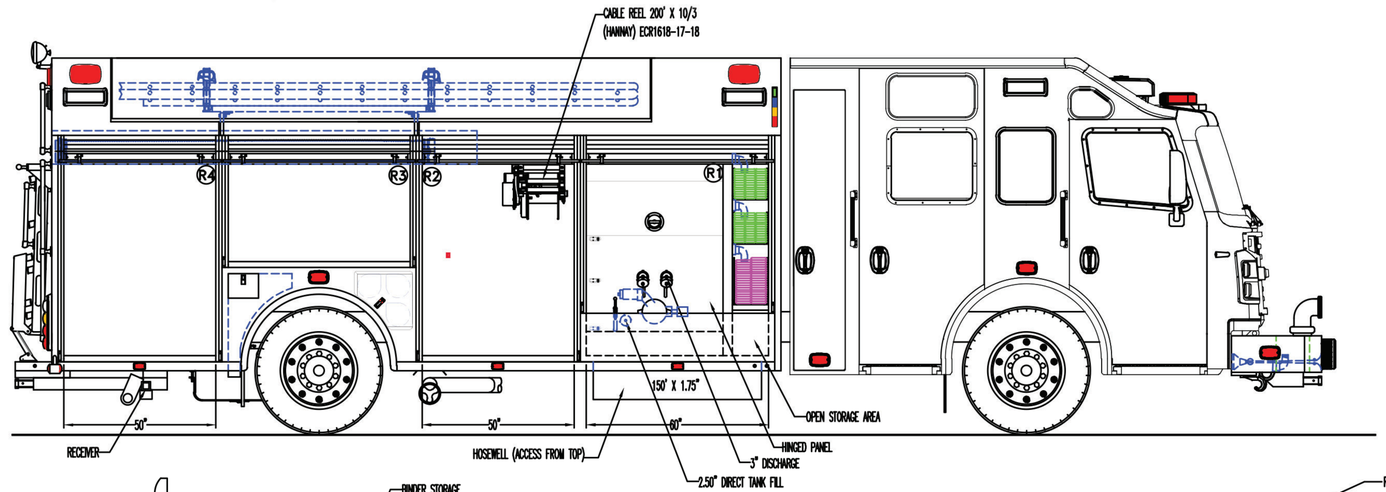

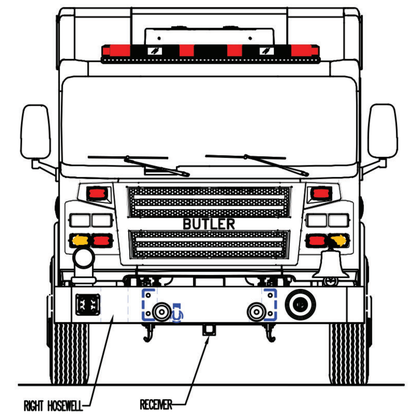

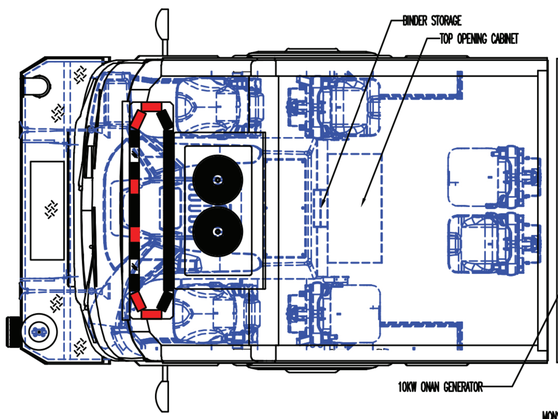

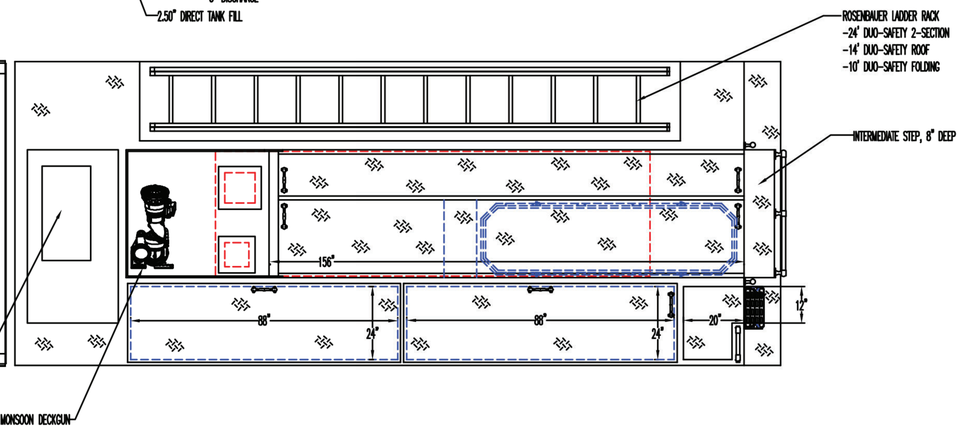

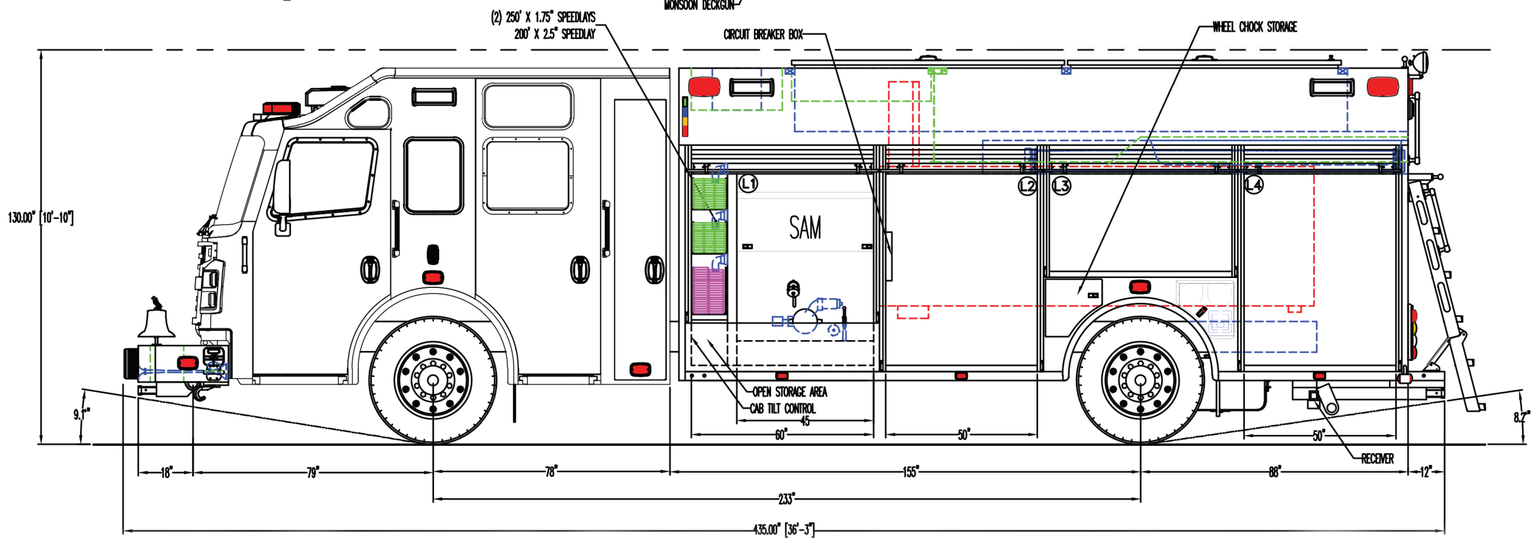

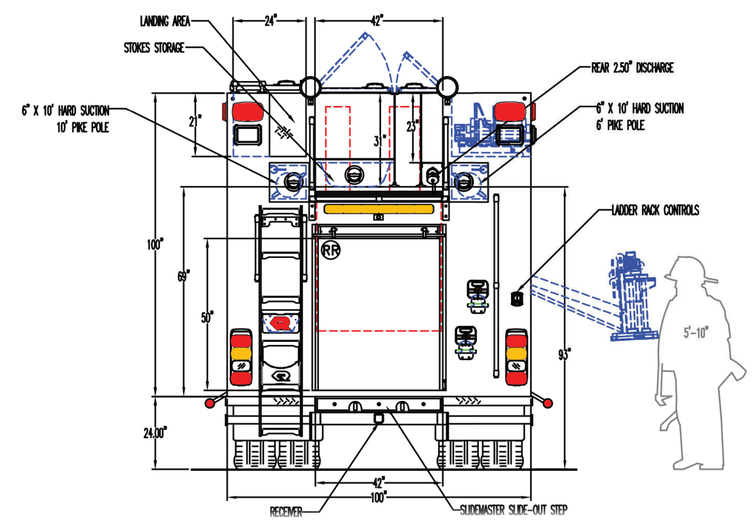

rosenbauer

SENTINEL
EMERGENCY SOLUTIONS